ITEM #01-236-2

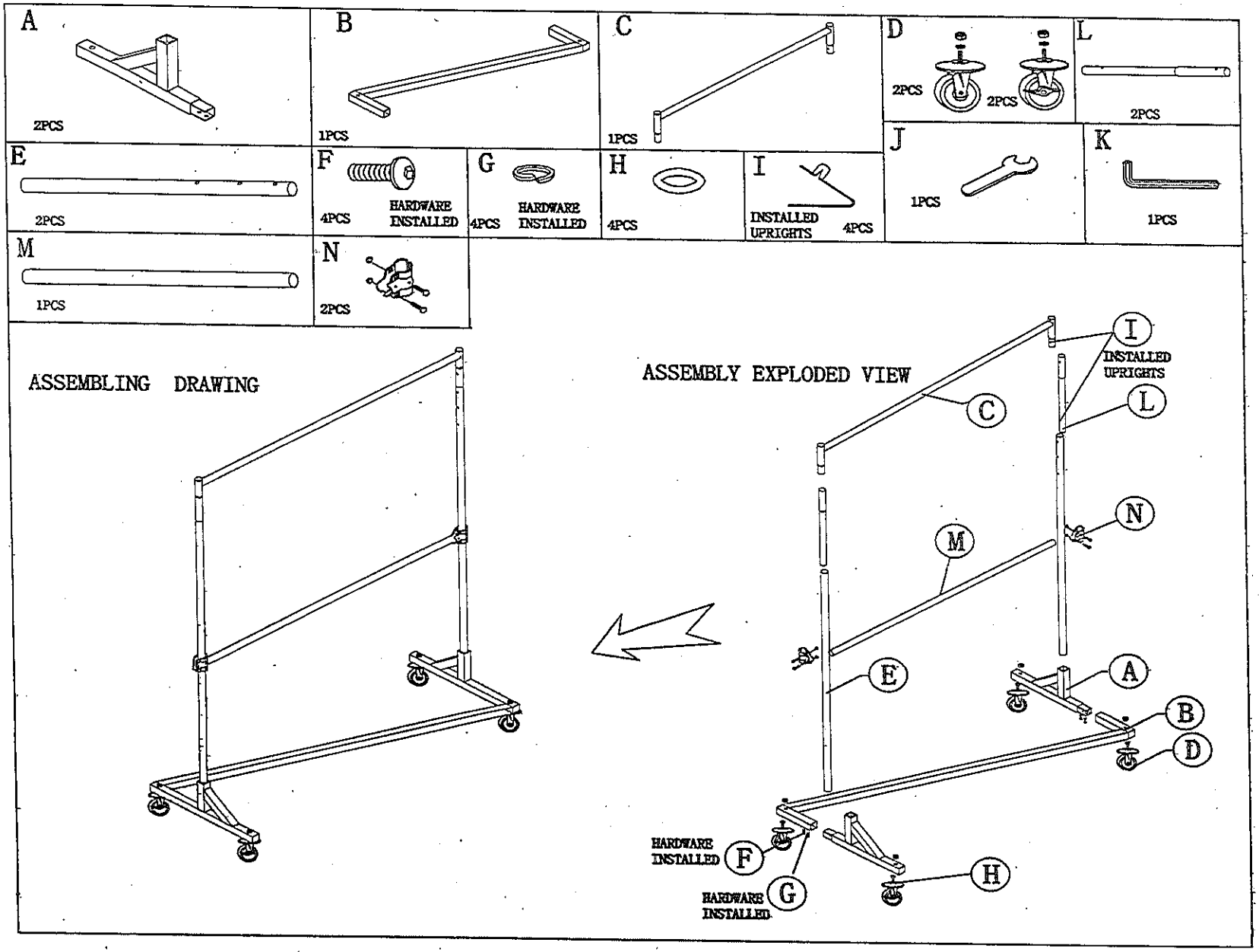
A
2PCS
B
1PCS
C
1PCS
D
2PCS
2PCS
L
2PCS
E
2PCS
F
4PCS
HARDWARE INSTALLED
G
4PCS
HARDWARE INSTALLED
H
4PCS
I
INSTALLED UPRIGHTS
4PCS
J
1PCS
K
1PCS
M
1PCS
N
2PCS
ASSEMBLING DRAWING
ASSEMBLY EXPLODED VIEW
I
INSTALLED UPRIGHTS
C
L
N
M
E
A
B
D
HARDWARE INSTALLED
F
G
HARDWARE INSTALLED
H